NOT USED

1

STRUCTURAL STEEL AND MISCELLANEOUS METAL

1. ALL PORTIONS OF WORK PERTAINING TO STRUCTURAL STEEL CONSTRUCTION SHALL CONFORM TO TITLE 24, PART 2, CHAPTER 22A.
2. ALL STRUCTURAL STEEL SHALL CONFORM TO ASTM A-992, UNLESS NOTED OTHERWISE.
3. ROUND HOLLOW STRUCTURAL SECTION (HSS) SHALL CONFORM TO ASTM A-500, GRADE B.
4. SQUARE AND RECTANGULAR HOLLOW STRUCTURAL SECTIONS (HSS) SHALL CONFORM TO ASTM A-500, GRADE B.
5. CHANNELS, ANGLES AND PLATES SHALL CONFORM TO ASTM A-36, UNLESS NOTED OTHERWISE.
6. ALL BOLTS SHALL CONFORM TO THE FOLLOWING, UNLESS NOTED OTHERWISE:
   A. ANCHOR BOLTS: ASTM A-307
   B. TYPICAL STEEL CONNECTIONS: ASTM A-325N (NON-SLIP-CRITICAL)
   C. MISCELLANEOUS CONNECTIONS NOT NOTED OTHERWISE: ASTM A-307
7. ANCHOR BOLTS SHALL BE HEX HEADED. BENT BAR ANCHORS SHALL NOT BE USED.
8. STRUCTURAL STEEL SHOP DRAWINGS SHALL BE SUBMITTED TO THE ARCHITECT FOR REVIEW AND APPROVAL PRIOR TO FABRICATION.
9. ALL WELDING SHALL CONFORM TO THE STRUCTURAL WELDING CODE - STEEL, AWS D1.1, BY THE AMERICAN WELDING SOCIETY. WELDING RODS SHALL BE E70XX. ALL WELDING SHALL BE PERFORMED BY CERTIFIED WELDERS.
10. ALL WELDS NOT SPECIFIED SHALL BE CONTINUOUS FILLET WELDS. SIZE OF WELDS SHALL BE BASED ON AWS D-1.1 FOR THICKER PART JOINED.
11. BOLT HOLES SHALL BE 1/16" LARGER IN DIAMETER THAN NOMINAL SIZE OF BOLT USED, UNLESS NOTED OTHERWISE. BOLT HOLES AT COLUMN BASEPLATES MAY BE 3/16" MAXIMUM LARGER IN DIAMETER THAN NOMINAL SIZE OF ANCHOR BOLT USED, UNLESS NOTED OTHERWISE.
12. DO NOT PAINT STRUCTURAL STEEL SURFACES THAT ARE TO RECEIVE SPRAY-APPLIED FIREPROOFING OR TO BE ENCASED IN CONCRETE OR MASONRY.
13. ALL STRUCTURAL STEEL AND MISCELLANEOUS METAL ITEMS, INCLUDING CONNECTORS, EXPOSED TO THE WEATHER SHALL BE HOT-DIPPED GALVANIZED, AFTER FABRICATION.
14. STRUCTURAL STEEL SHALL BE DELIVERED TO THE JOB SITE FREE OF EXCESSIVE RUST, MILL SCALE, GREASE, ETC.
15. OPENINGS SHALL NOT BE PLACED IN STEEL MEMBERS UNLESS SPECIFICALLY DETAILED.

CONCRETE BLOCK MASONRY (f'm = 1500 PSI)

1. ALL PORTIONS OF WORK PERTAINING TO CONCRETE BLOCK MASONRY CONSTRUCTION SHALL CONFORM TO TITLE 24, PART 2, CHAPTER 21A.
2. CONCRETE BLOCKS SHALL BE HOLLOW LOAD-BEARING CONCRETE MASONRY UNITS CONFORMING TO ASTM C-90, MEDIUM WEIGHT UNITS. USE OPEN END UNITS AT VERTICAL REINFORCING.
3. CEMENT SHALL BE AS SPECIFIED FOR CONCRETE.
4. MORTAR SHALL CONFORM TO ASTM C-270 AND THE PROPORTION SPECIFICATIONS OF TABLE NO. 2103A.8(1), FOR TYPE S MORTAR. MORTAR SHALL ATTAIN A MINIMUM COMPRESSIVE STRENGTH OF 1800 PSI AT 28 DAYS.
5. GROUT SHALL CONFORM TO TABLE NO. 2103A.12, FOR COARSE GROUT. USE SUFFICIENT WATER FOR GROUT TO FLOW INTO ALL CELLS WITHOUT SEGREGATION. ADMIXTURE SHALL BE SIKA GROUT AID, OR APPROVED EQUAL. GROUT SHALL ATTAIN A MINIMUM COMPRESSIVE STRENGTH OF 2000 PSI AT 28 DAYS.
6. PROVIDE A MINIMUM ONE BAR DIAMETER OF GROUT BETWEEN MAIN REINFORCING AND MASONRY UNITS. PROVIDE A MINIMUM OF 1" OF GROUT AROUND ALL BOLTS EMBEDDED IN MASONRY.
7. CELLS SHALL BE IN VERTICAL ALIGNMENT. DOWELS IN FOOTINGS SHALL BE SET TO ALIGN WITH CORES CONTAINING VERTICAL REINFORCING.
8. ALL CELLS IN CONCRETE BLOCKS SHALL BE SOLIDLY FILLED WITH GROUT.
9. LOW-LIFT GROUTED CONSTRUCTION SHALL CONFORM TO SEC. 2104A.6.1.2.1 AND SEC. 2104A.6.1.2.2. MAXIMUM GROUT POUR HEIGHT FOR LOW-LIFT CONSTRUCTION SHALL BE 4 FEET.
10. HIGH-LIFT GROUTED CONSTRUCTION SHALL CONFORM TO SEC. 2104A.6.1.2.1, SEC. 2104A.6.1.2.3, AND DIVISION OF THE STATE ARCHITECT (DSA) IR 21-2. MAXIMUM GROUT POUR HEIGHT SHALL NOT EXCEED 8 FEET. PROVIDE CLEANOUT OPENINGS AT THE BOTTOM OF EACH POUR OF GROUT.
11. GROUT POURS SHALL BE CONSOLIDATED BY MECHANICAL VIBRATION.
12. HORIZONTAL REINFORCING SHALL BE PLACED IN BOND BEAM UNITS.
13. REFER TO ARCHITECTURAL DRAWINGS FOR SURFACE TEXTURE, HEIGHT OF MASONRY UNITS, LAYING PATTERN AND JOINT TYPE. USE RUNNING BOND PATTERN, UNLESS NOTED OTHERWISE.
14. NO PIPES OR DUCTS SHALL BE PLACED IN MASONRY CONSTRUCTION UNLESS SPECIFICALLY NOTED OR DETAILED.
15. ALL STRUCTURAL MASONRY WORK SHALL BE CONTINUOUSLY INSPECTED DURING LAYING AND GROUTING BY A SPECIAL INSPECTOR SPECIFICALLY APPROVED BY THE ENFORCEMENT AGENCY FOR THAT PURPOSE.

4

5

6

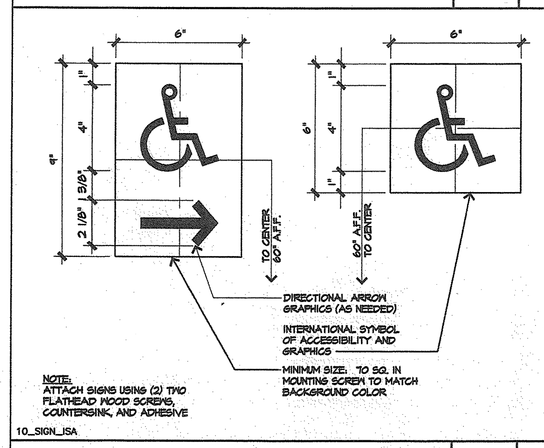

ACCESS SIGNAGE 3":1'-0" 7

GENERAL NOTES 9

10

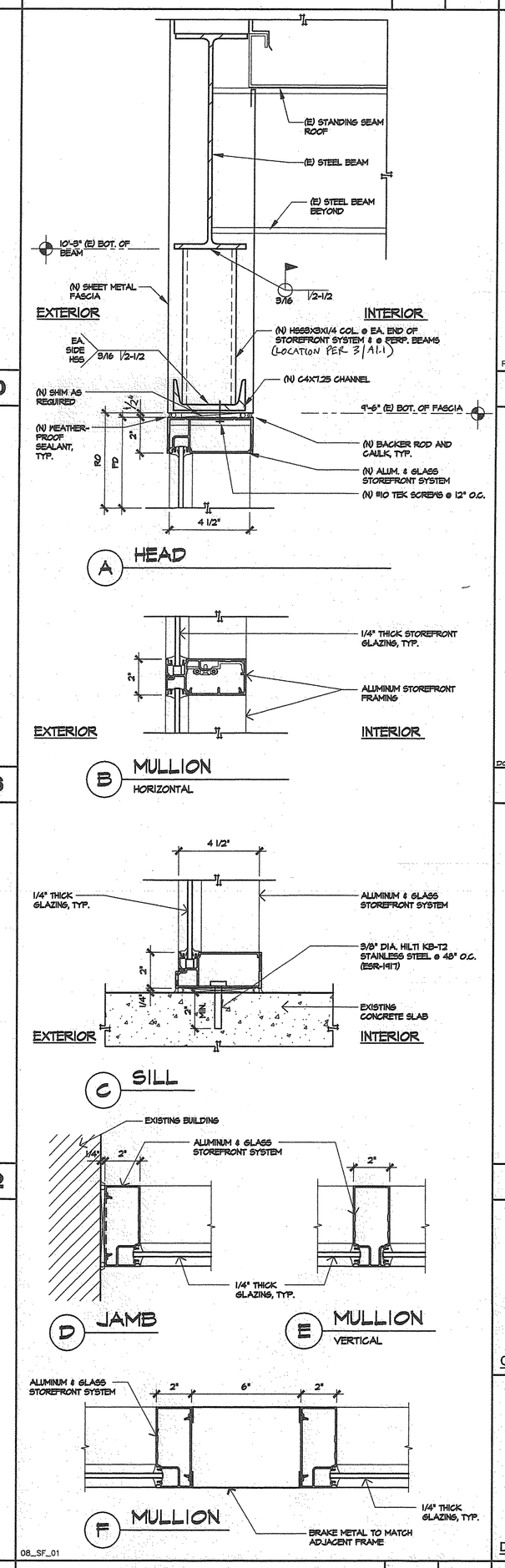

H.M. STOREFRONT DETAILS 3":1'-0" 29

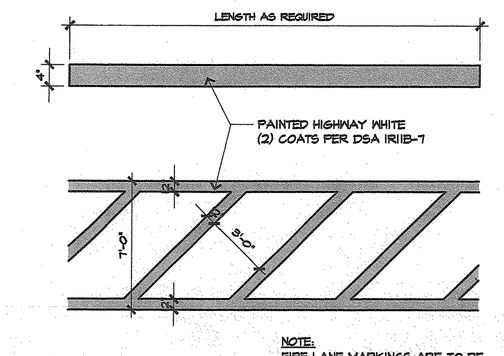

PAVEMENT STRIPING N.T.S. 12

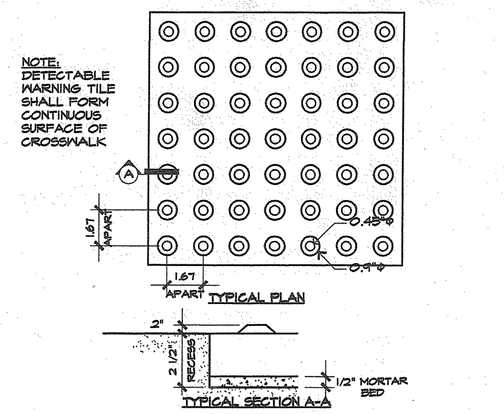

DETECTABLE WARNING TILE 3":1'-0" 18

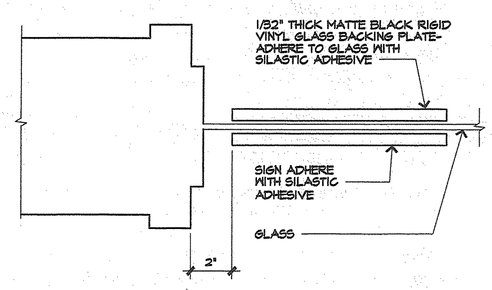

TYP. SIGN ATTACH. @ GLASS 3":1'-0" 13

15

16

NOT USED

19

CONCRETE

1. ALL PORTIONS OF WORK PERTAINING TO CONCRETE CONSTRUCTION SHALL CONFORM TO TITLE 24, PART 2, CHAPTER 19A.
2. CONCRETE MIXES SHALL BE DESIGNED BY A QUALIFIED TESTING LABORATORY. MIX DESIGNS SHALL CONFORM TO SEC. 1905A.2. MIX DESIGNS SHALL INCORPORATE THE FOLLOWING CRITERIA:
   A. MINIMUM OF 5 SACKS OF CEMENT PER CUBIC YARD OF CONCRETE. MAXIMUM OF 7 SACKS OF CEMENT PER YARD OF CONCRETE.
   B. MAXIMUM WATER/CEMENT RATIO (BY WEIGHT) OF CONCRETE IN CONTACT WITH SOIL SHALL BE 0.45.
   C. MAXIMUM SLUMP SHALL NOT EXCEED 3" +/- 1" FOR FOOTINGS, SLABS ON GRADE, AND MASS CONCRETE; AND 4" +/- 1" FOR OTHER CONCRETE. SLUMP LIMITATIONS NOTED SHALL APPLY TO CONCRETE MIX PRIOR TO THE ADDITION OF ANY WATER-REDUCING ADMIXTURES OR SUPER-PLASTICIZERS.
   D. ADMIXTURES SHALL BE APPROVED BY THE DIVISION OF THE STATE ARCHITECT (DSA) PRIOR TO USE. CALCIUM CHLORIDE OR ADMIXTURES CONTAINING CHLORIDE(S) SHALL NOT BE USED.
3. SCHEDULE OF STRUCTURAL CONCRETE 28 DAY MINIMUM STRENGTHS AND TYPES:
   A. ALL CONCRETE 145 PCF, f'c = 4,000 PSI
4. PORTLAND CEMENT SHALL CONFORM TO ASTM C-150, TYPE II. CEMENT USED FOR CONCRETE IN CONTACT WITH SOIL SHALL CONFORM TO ASTM C-150, TYPE V.
5. AGGREGATE FOR NORMALWEIGHT CONCRETE SHALL CONFORM TO ASTM C-33. COMBINED AGGREGATE GRADATION OF 3/8" MAXIMUM (PEA GRAVEL) SHALL NOT BE USED.
6. READY MIXED CONCRETE SHALL CONFORM TO ASTM C-94.
7. PLACEMENT OF CONCRETE SHALL CONFORM TO ACI 304. CLEAN AND ROUGHEN TO 1/4" AMPLITUDE ALL CONCRETE SURFACES AGAINST WHICH CONCRETE IS TO BE PLACED.
8. ALL REINFORCING BARS, ANCHOR BOLTS AND OTHER CONCRETE INSERTS SHALL BE SECURED IN POSITION PRIOR TO PLACING CONCRETE.
9. THE FOLLOWING MINIMUM CONCRETE COVER SHALL BE PROVIDED FOR REINFORCEMENT:

CONCRETE CAST AGAINST AND PERMANENTLY EXPOSED TO EARTH	3"
CONCRETE EXPOSED TO EARTH OR WEATHER:	
#6 THROUGH #18 BARS	2"
#5 BARS, W31 OR D31 WIRE, AND SMALLER	1-1/2"
CONCRETE NOT EXPOSED TO WEATHER OR IN CONTACT WITH GROUND:	
SLABS, WALLS, JOISTS:	
#14 AND #18 BARS	1-1/2"
#11 BAR AND SMALLER	3/4"
BEAMS, COLUMNS: PRIMARY REINFORCEMENT	
STIRRUPS, TIES, SPIRALS	1 1/2"

20

22

24

NOT USED

REINFORCING STEEL

1. ALL PORTIONS OF WORK PERTAINING TO FABRICATION AND PLACEMENT OF REINFORCING STEEL SHALL CONFORM TO TITLE 24, PART 2, CHAPTER 19A, SECTION 1907A.
2. REINFORCING BARS SHALL CONFORM TO ASTM A-615 GRADE 60, EXCEPT #3 BARS MAY BE GRADE 40. REINFORCING BARS THAT ARE TO BE WELDED SHALL CONFORM TO ASTM A-706, GRADE 60.
3. ALL REINFORCING BAR BENDS SHALL BE MADE COLD. ALL #5 OR LARGER REINFORCING BARS SHALL NOT BE RE-BENT.
4. DOWELS BETWEEN FOOTINGS AND WALLS OR COLUMNS SHALL BE THE SAME GRADE, SIZE, SPACING AND NUMBER AS THE VERTICAL REINFORCEMENT, RESPECTIVELY.
5. REINFORCING SPLICES SHALL BE MADE AS INDICATED ON THE DRAWINGS.

25

GENERAL NOTES 26

27

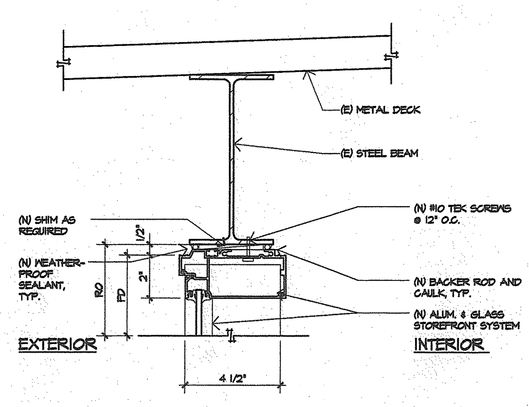

HM STOREFRONT @ COLUMN 3":1'-0" 28

CONSULTANT

DSA APPROVAL

IDENTIFICATION STAMP
DIV OF THE STATE ARCHITECT
OFFICE OF REGULATION SERVICES
04-110728
DATE DEC 07 2009

APPROVALS

Drawn by	HU, MN	No.	DATE	BY	REMARKS
Checked by	MH				
Date	10-5-09				
Commission No.	1-65-07				

16507-AD.1-DT. DWG

Architects•Planners

Ruhnau Ruhnau Clarke
3775 Tenth Street • Riverside, CA 92501-3669 • T 951 684 4664 • F 951 684 6276
5751 Palmer Way, Suite C • Carlsbad, CA 92010-7249 • T 760 438 5899 • F 760 931 8194

TWO BUNCH PALMS ELEMENTARY SCHOOL
NEW VESTIBULE & SITE IMPROVEMENTS
PALM SPRINGS UNIFIED SCHOOL DISTRICT

MISCELLANEOUS DETAILS
MISCELLANEOUS DETAILS

Sheet Number
AD.1
Of Sheets