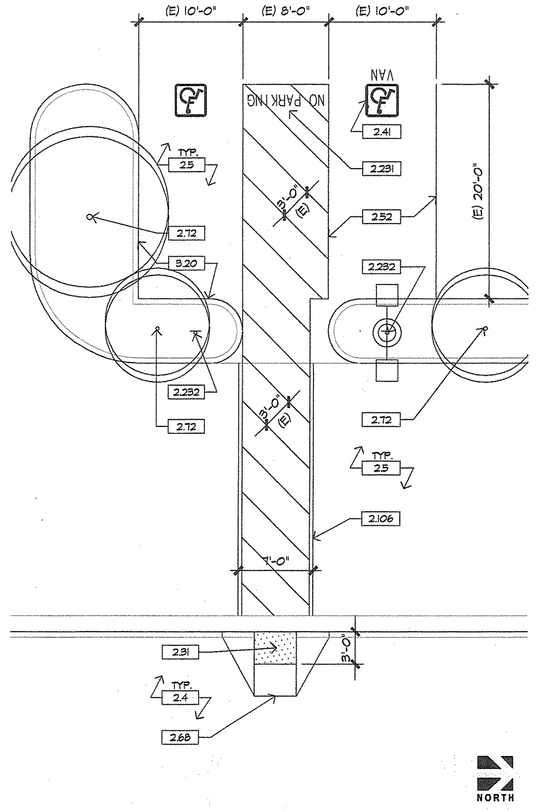

(E) ACCESSIBLE PARKING | 1/8"=1'-0" | 7

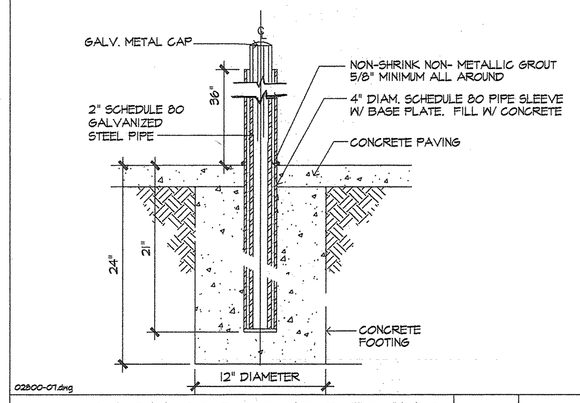

SIGN POST FOOTING | 1-1/2"=1'-0" | 2

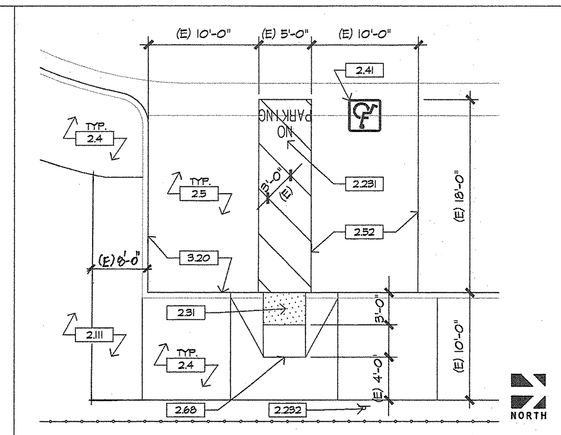

(E) ACCESSIBLE PARKING | 1/8"=1'-0" | 3

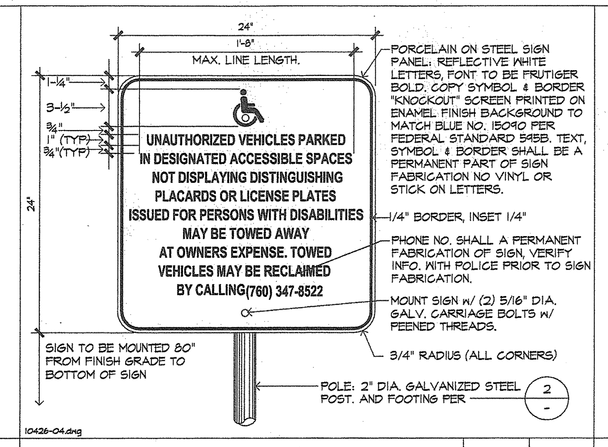

ENTRANCE SIGN | 1-1/2" | 4

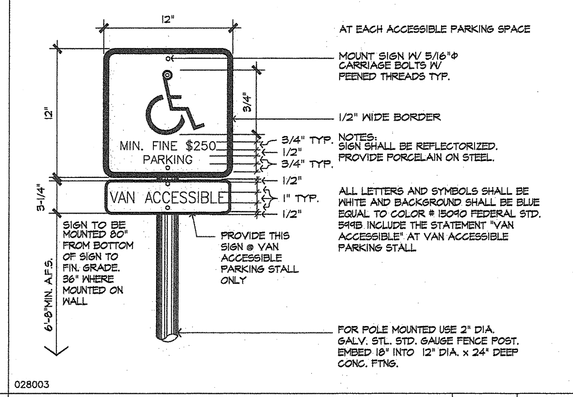

ACCESSIBLE PARKING SIGN | 1 1/2"=1'-0" | 8

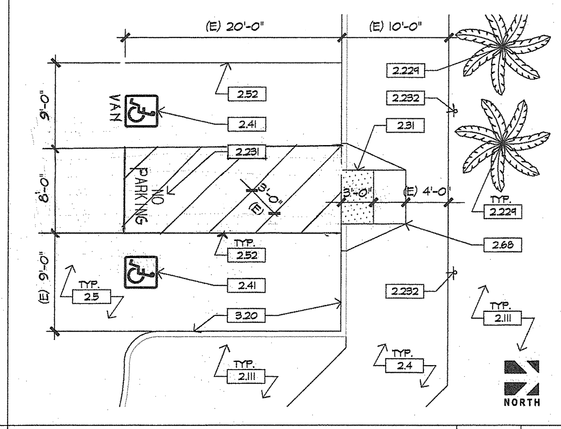

(E) ACCESSIBLE PARKING | 1/8"=1'-0" | 9

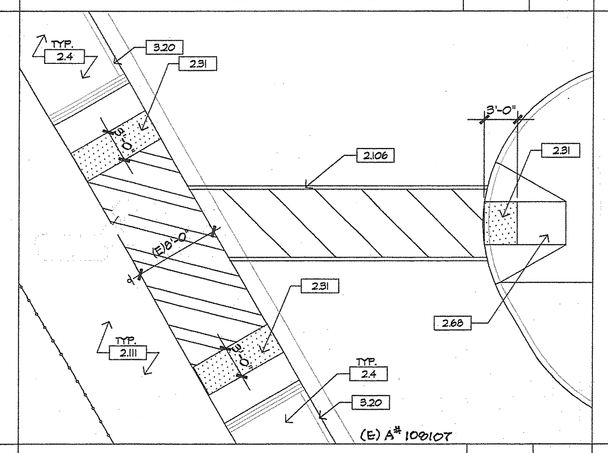

(E) ACCESSIBLE WALKWAY | 1/8"=1'-0" | 10

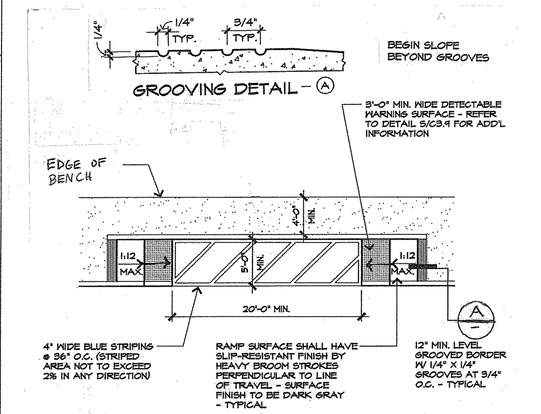

PASSENGER LOADING ZONE | 1/8" | 11

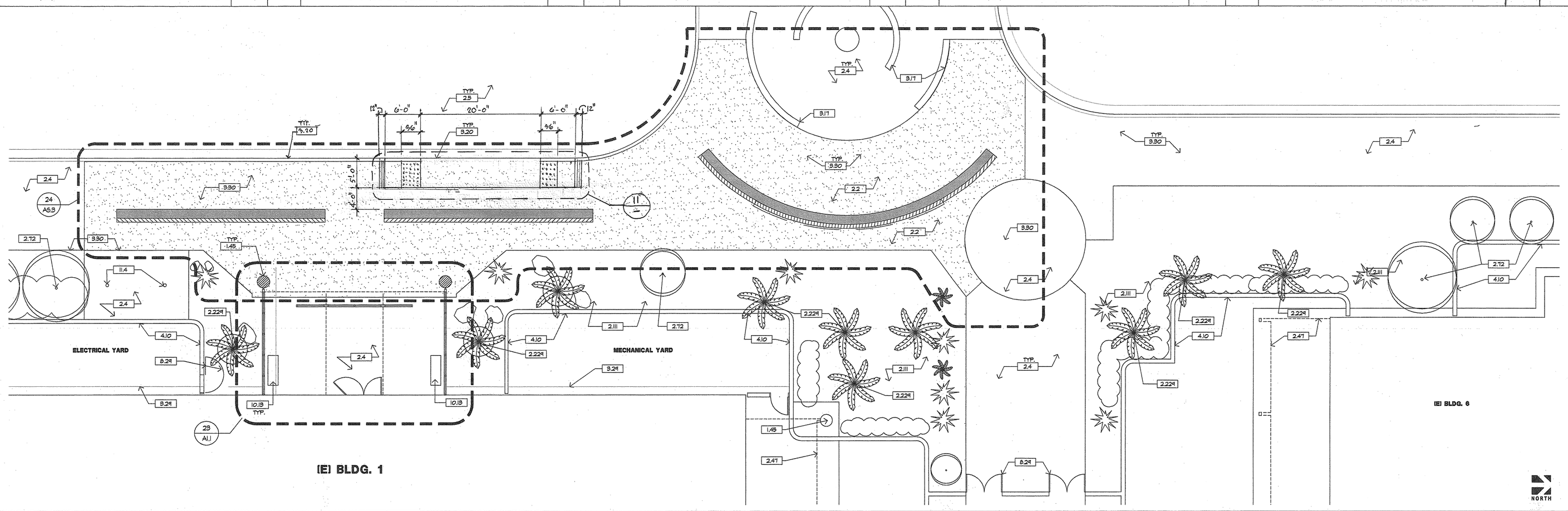

ENLARGED SITE PLAN | 1/8"=1'-0" | 24

NEW CONSTRUCTION KEYNOTES

1 GENERAL
1.4S EXISTING CONCRETE COLUMN TO REMAIN, CLEAN & PROTECT IN PLACE.

2 SITE WORK
2.2 NEW 4" PORTLAND CEMENT CONCRETE PAVING OVER 2" SAND, REFER TO DETAIL 1, 26/A5.3
2.4 EXISTING CONCRETE PAVING TO REMAIN, PROTECT IN PLACE
2.5 EXISTING ASPHALT PAVING TO REMAIN. PROTECT IN PLACE
2.8I NEW TRUNCATED DOME. SEE DETAIL 18/AD.1
2.4I EXISTING ACCESSIBLE PARKING SYMBOL., REPAINT AS NEEDED.
2.4T LINE OF COVERED WALKWAY AND/OR CANOPY ABOVE
2.5Z 4" WIDE PARKING STRIPING
2.6P EXISTING CURB CUT RAMP TO REMAIN. PROTECT IN PLACE
2.7Z EXISTING TREE TO REMAIN. PROTECT IN PLACE.
2.10G NEW CROSS WALK STRIPING. SEE DETAIL 12/AD.1
2.11 EXISTING LANDSCAPE AREA TO REMAIN
2.14B EXISTING LIGHT POLE TO REMAIN.
2.22O LOCATION OF SALVAGED TREE.
2.22T EXISTING TALL PALM TREE TO REMAIN. PROTECT IN PLACE.
2.23I PAINT 12" HIGH LETTERS IN WHITE.
2.23Z NEW ACCESSIBLE PARKING SIGNAGE. SEE DETAIL 8/A5.2
2.23S NEW 5'-0" DIA. CONCRETE TREE WELL.

3 CONCRETE
3.17 EXISTING CONCRETE SEAT WALL TO REMAIN.
3.20 EXISTING CONCRETE CURB TO REMAIN.
3.26 NEW CONCRETE MOW STRIP. REFER TO DETAIL 24/A5.3
3.28 NEW CAST-IN-PLACE CONCRETE SEAT WALL WITH FINISH AND CHAMFERED EDGES TO MATCH EXISTING SEAT WALL. SEE KEYNOTE 3.17
3.29 EXISTING CONCRETE APRON TO REMAIN.
3.30 EXISTING CONCRETE CONTROL JOINT TO REMAIN.

4 MASONRY
4.10 EXISTING MASONRY WALL TO REMAIN. PROTECT IN PLACE
4.18 NEW 8'-4" HIGH MIN. C.M.U. WALL - (16"x 8"x 8") SPLIT FACED NATURAL FINISH. SEE DETAILS 10, 11/A5.3
4.1S NEW 8'-0" HIGH MIN. CMU WALL - (16"x 8"x 8") SPLIT FACED NATURAL FINISH SEE DETAILS 2, 3, 6/A5.3

8 DOORS & WINDOWS
8.24 EXISTING GATE TO REMAIN. PROTECT IN PLACE.

10 SPECIALTIES
10.11 REMOVE EXISTING NON COMPLIANT SIGN, REPLACE WITH NEW ACCESSIBLE ENTRANCE SIGN. SEE DETAIL 4/A5.2
10.12 EXISTING STOP SIGN/DO NOT ENTER TO REMAIN.
10.18 SALVAGE EXISTING BENCH. TURN OVER TO DISTRICT FOR SAFE KEEPING.

11 EQUIPMENT
11.4 EXISTING FLAG POLE TO REMAIN. PROTECT IN PLACE.

CONSULTANT

DSA APPROVAL

IDENTIFICATION STAMP
DIV OF THE STATE ARCHITECT
OFFICE OF REGULATION SERVICES
04-110728
AC NV FLS SV SS TB
DATE DEC 0 7 2009

APPROVALS

Drawn by	HU, MN
Checked by	MH
Date	10-5-09
Commission No.	1-65-07

No.	DATE	BY	REMARKS

16507-AS.2-ESP-EE.DWG

Architects•Planners
Ruhnau Ruhnau Clarke
37735 Tenth Street • Riverside, CA 92501-3669 • T 951 684 4664 • F 951 684 6276
5751 Palmer Way, Suite C • Carlsbad, CA 92010-7249 • T 760 438 5899 • F 760 931 8194

TWO BUNCH PALMS ELEMENTARY SCHOOL
NEW VESTIBULE & SITE IMPROVEMENTS
PALM SPRINGS UNIFIED SCHOOL DISTRICT

ENLARGED SITE PLAN
MISCELLANEOUS DETAILS

Sheet Number
AS.2
Of Sheets