NEW CONSTRUCTION KEYNOTES

2 SITE WORK
2.2 NEW 4" PORTLAND CEMENT CONCRETE PAVING OVER 2" SAND, REFER TO DETAIL 1, 26/AS3
2.4 EXISTING CONCRETE PAVING TO REMAIN, PROTECT IN PLACE
8 DOORS & WINDOWS
8.25 EXISTING DOOR & FRAME TO REMAIN, PROTECT IN PLACE.

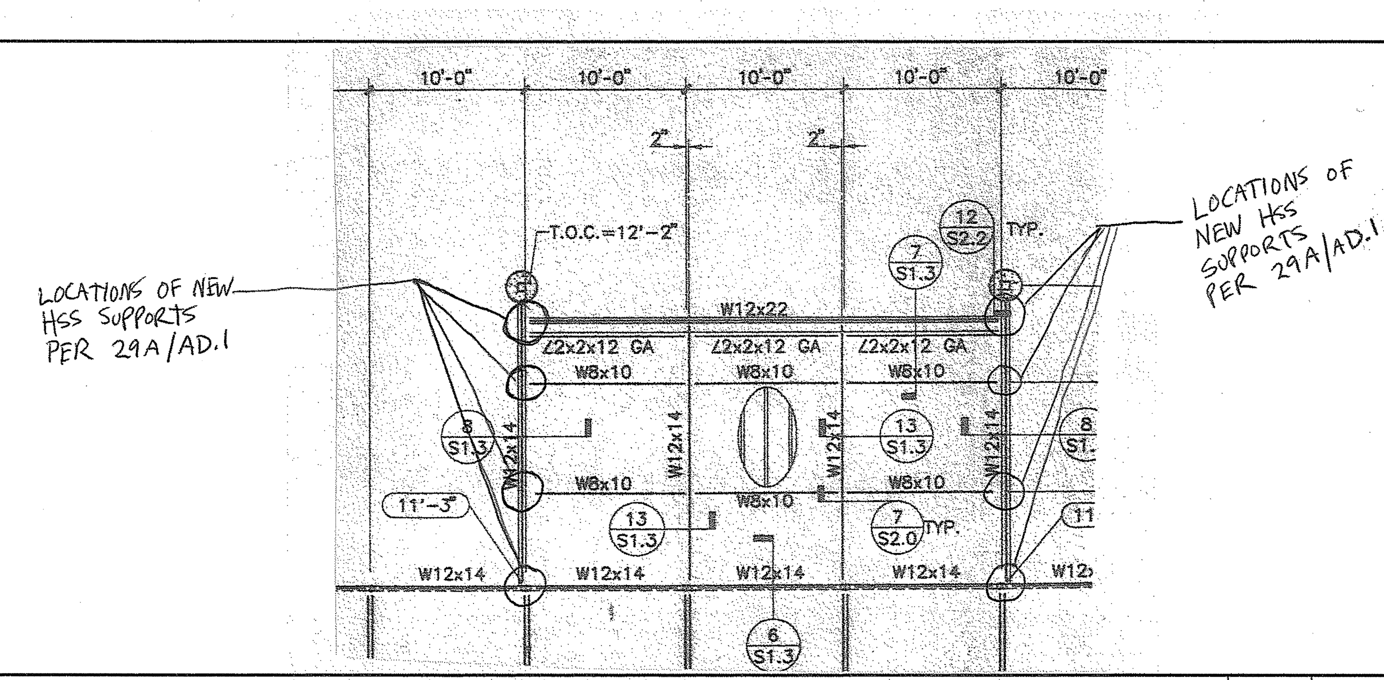

EXISTING ROOF FRAMING PLAN | NTS | 3

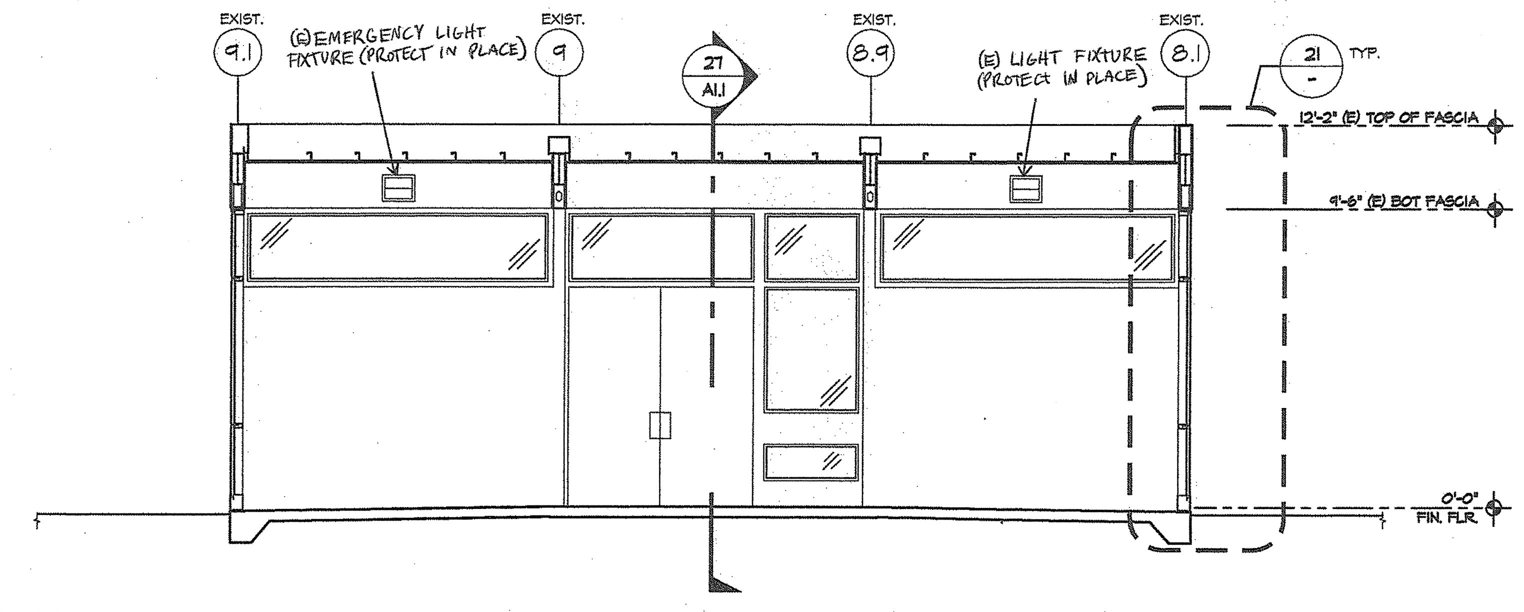

ELEVATION/SECTION | 1/4"=1'-0" | 5

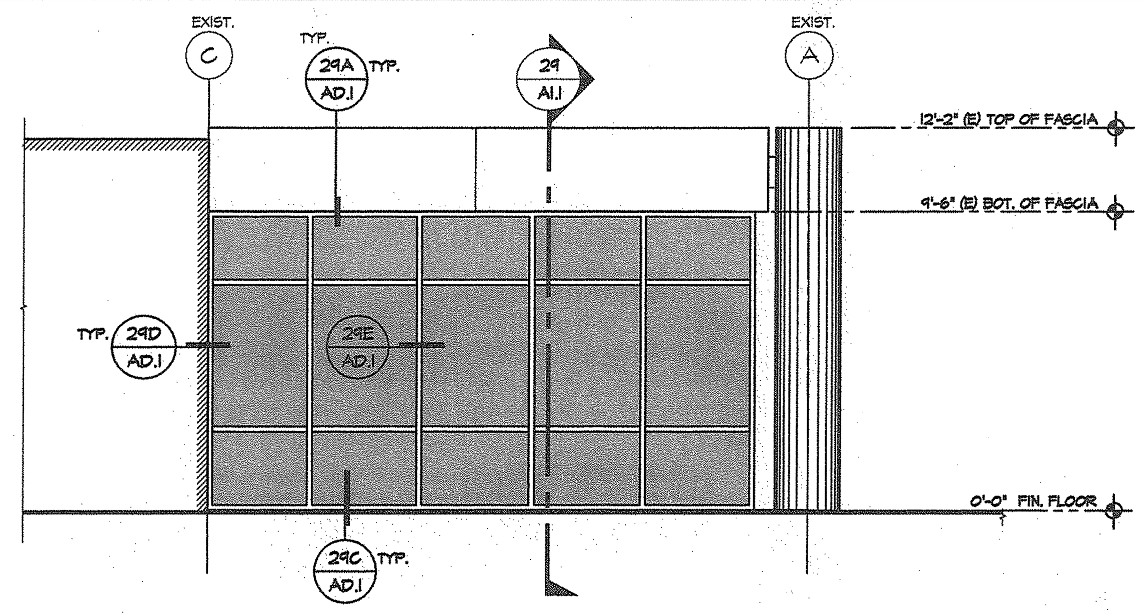

NORTH ELEVATION | 1/4"=1'-0" | 9

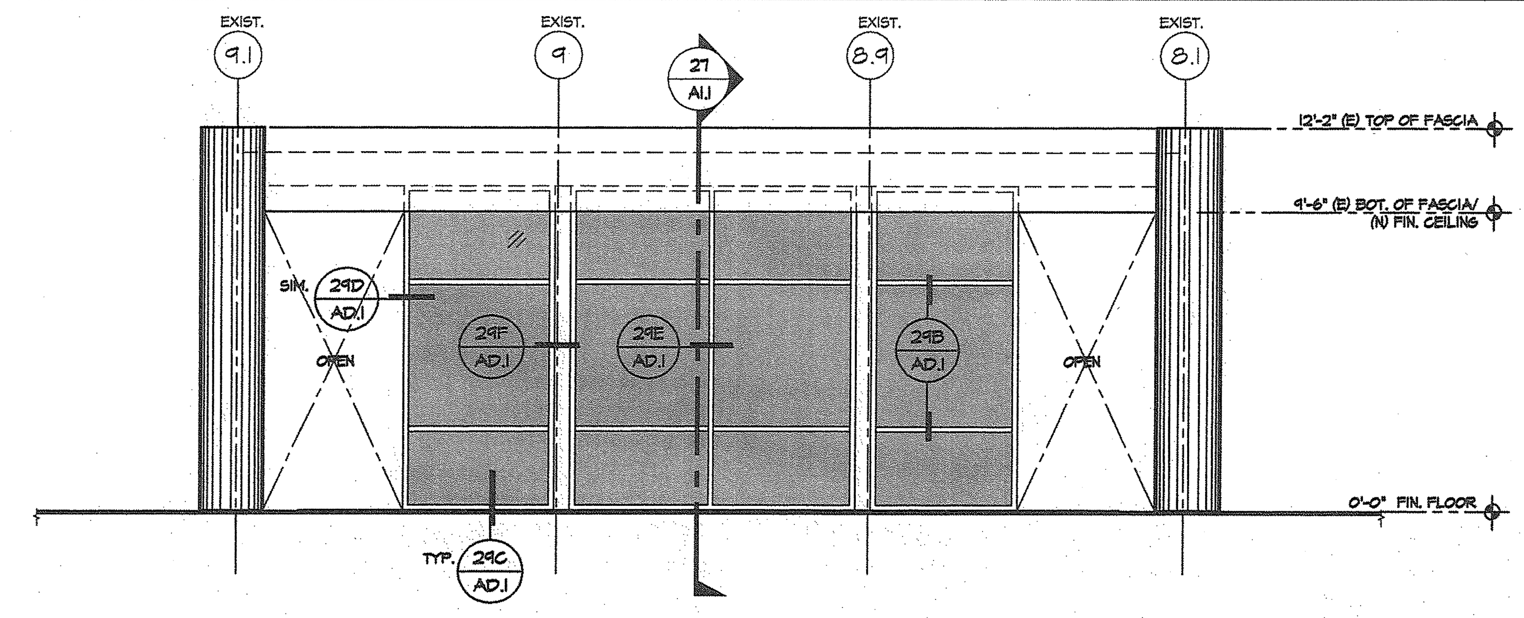

WEST ELEVATION | 1/4"=1'-0" | 11

12

NOT USED

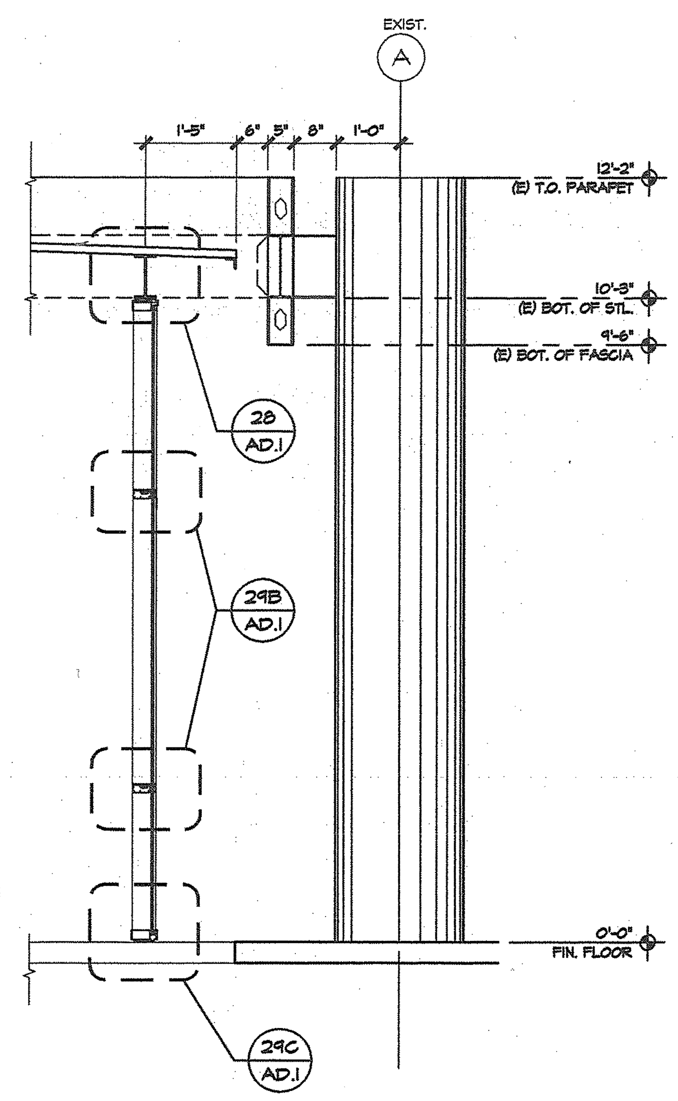

WALL SECTION | 1/2"=1'-0" | 20

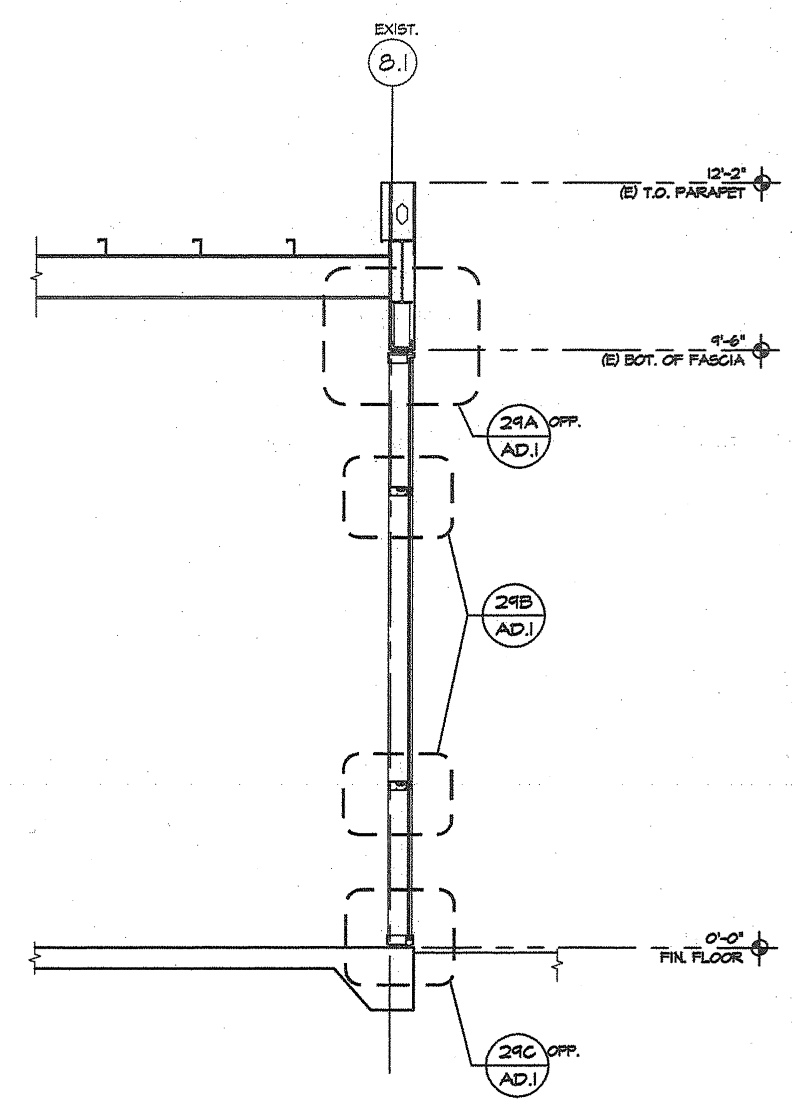

WALL SECTION | 1/2"=1'-0" | 21

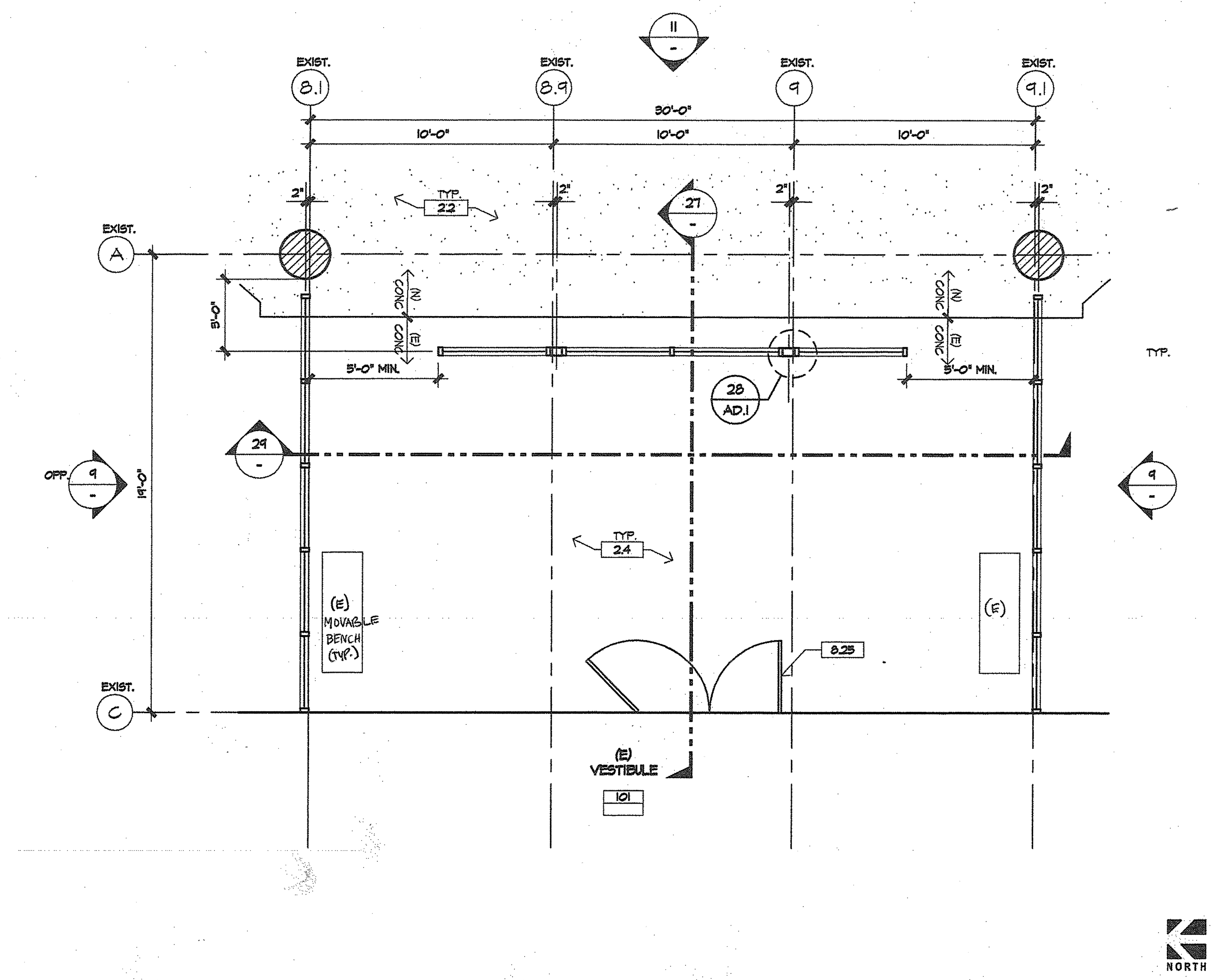

NEW EXTERIOR FLOOR PLAN | 1/4"=1'-0" | 23

18

NOT USED

24

NOT USED

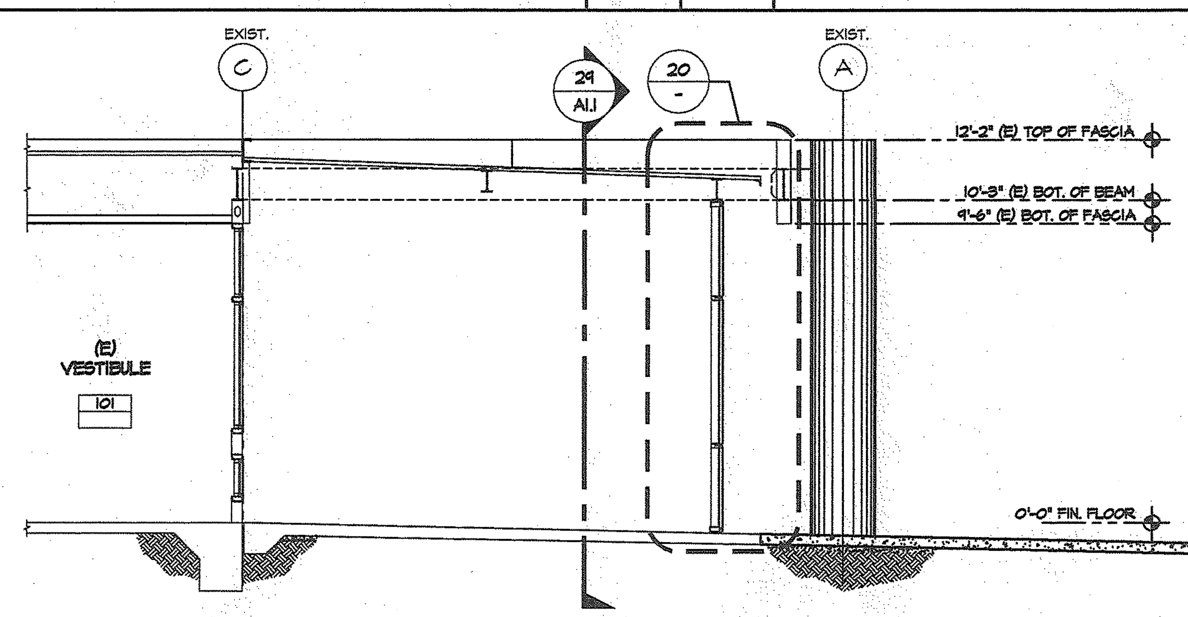

SECTION | 1/4"=1'-0" | 27

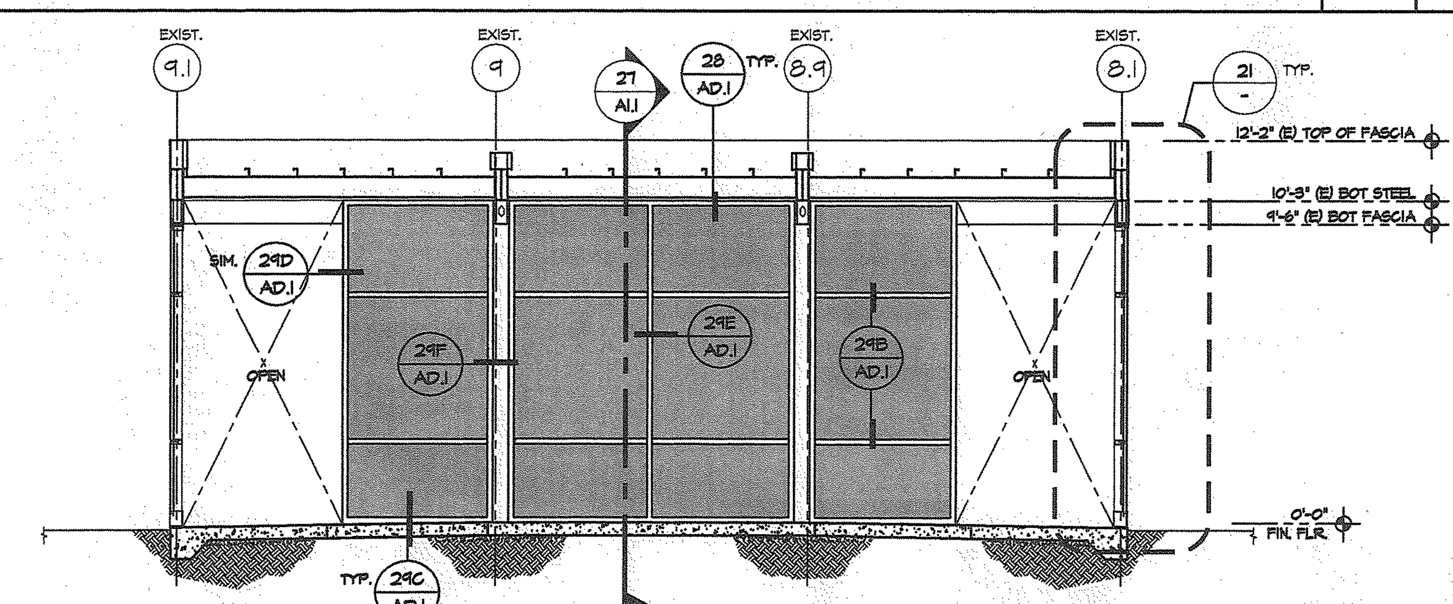

SECTION | 1/4"=1'-0" | 29

CONSULTANT

LICENSED ARCHITECT ROGER CLARKE C-11340 REN. 10-31-11 STATE OF CALIFORNIA

IDENTIFICATION STAMP
DIV OF THE STATE ARCHITECT
OFFICE OF REGULATION SERVICES
04-110728
AC MW FLS N SS TB
DATE DEC 0 7 2009

DSA APPROVAL

APPROVALS

		No.	DATE	BY	REMARKS
Drawn by	HU, MN	△			
Checked by	MH	△			
Date	10-5-09	△			
Commission No.	1-65-07	△			

16507-A1.1-EP-EE. DWG

Ruhnau Ruhnau Clarke
Architects•Planners
3775 Tenth Street•Riverside, CA 92501-3669 • T 951 684 4664 • F 951 684 6276
5751 Palmer Way, Suite C•Carlsbad, CA 92010-7249 • T 760 438 5899 • F 760 931 8194

TWO BUNCH PALMS ELEMENTARY SCHOOL
NEW VESTIBULE & SITE IMPROVEMENTS
PALM SPRINGS UNIFIED SCHOOL DISTRICT

FLOOR PLAN
EXTERIOR ELEVATIONS, SECTIONS

Sheet Number
A1.1
Of Sheets